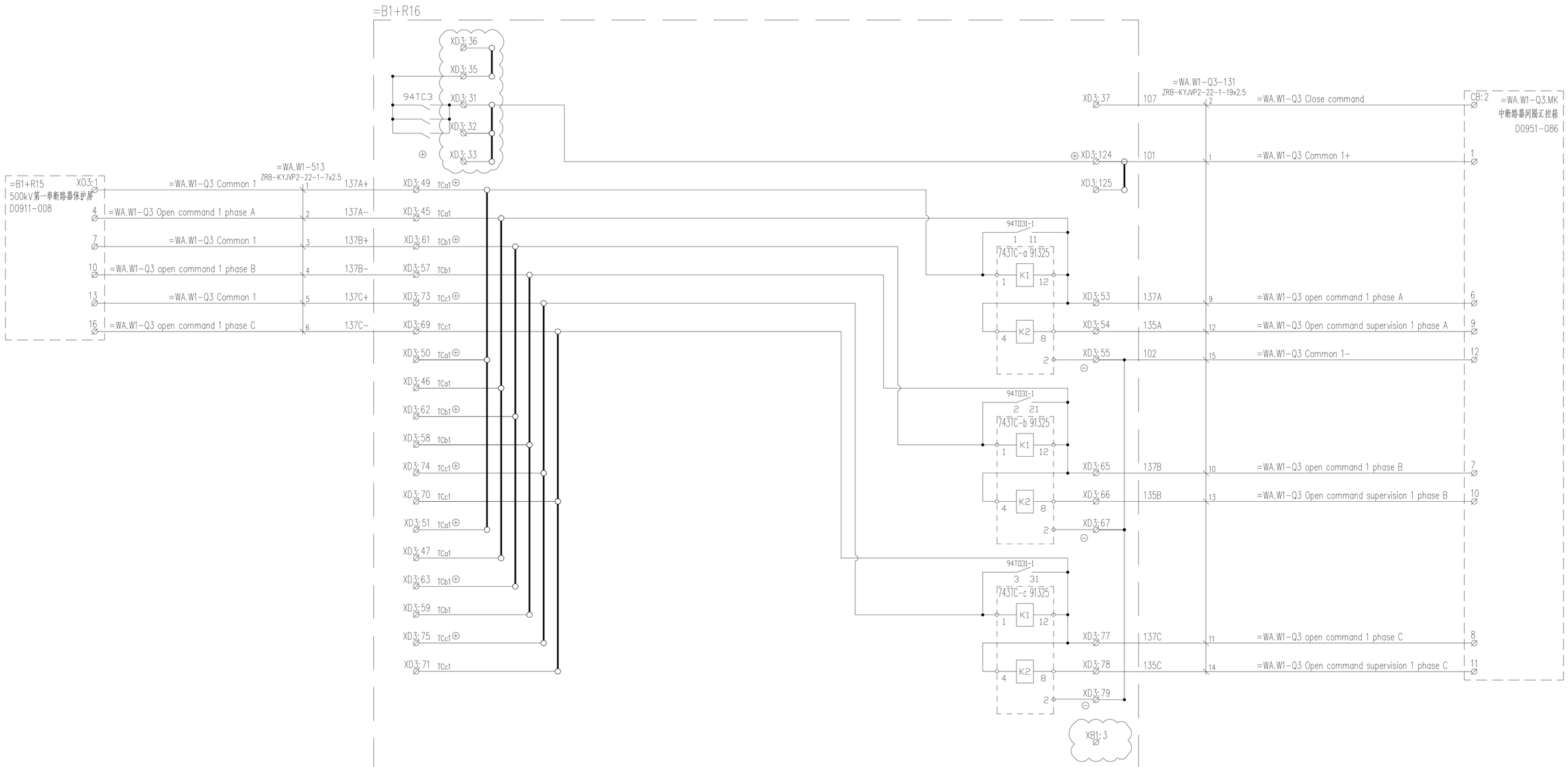

????????????±660kV??????

±660kV HVDC Project from Matiari to Lahore in Pakistan

NATIONAL TRANSMISSION & DESPATCH COMPANY (NTDC) LIMITED PAKISTAN

CONTRACTOR 国家电网 STATE GRID 中国电力技术装备有限公司 CHINA ELECTRIC POWER EQUIPMENT AND TECHNOLOGY CO.,LTD.

SUBCONTRACTOR East China Electric Power Design Institute Co.,Ltd.

???±660kV???

±660kV Lahore Converter Station

???? PHASE 施工图 Detail Design

MLHVDC-ENG-ECI-DD-PC-0911-016A

	?? Name	?? Date
?? Designed	倪 [illegible]	2020.3.5
?? Checked	徐 勇	2020.3.6
?? Reviewed	王建伟	2020.3.9
?? Approved	李治祥	2020.3.12
?? Scale		?? DWG NO.

500kV第一串断路器监视屏 Q3跳合闸回路图1

500kV W1 Breaker TCS Cubicle Q3 Close/Trip Circuit Diagram 1

30-B003701S-D0911-016

?? REV. A

420X594